https://github.com/pnadig1-asu/Redline-Rotary
https://youtu.be/lnX_TSrsm9A

Group 3 Phase 2 – Detailed CAD Design & Engineering Analysis

Overview of Design

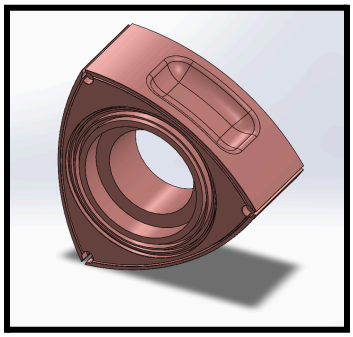

Rotor
Material: Cast Iron
Function: The rotor spins inside an epitrochoidal housing around the internal stationary gear. As the rotor spins, intake, compression, combustion, and exhaust occur as the chambers change in volume.

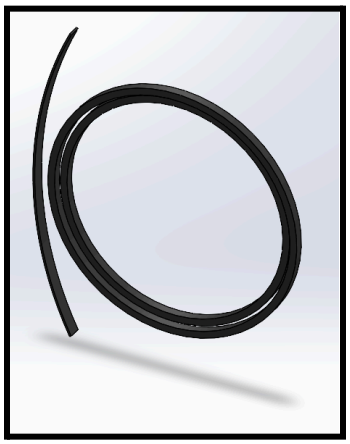

Side Seals
Material: Cast Iron (outside seals) & Silicon (inside seals)
Function: The side seals seal blowby compressed gasses and lubricating oil from exposure to each other while also keeping a low-friction contact between the rotor and the side the iron.

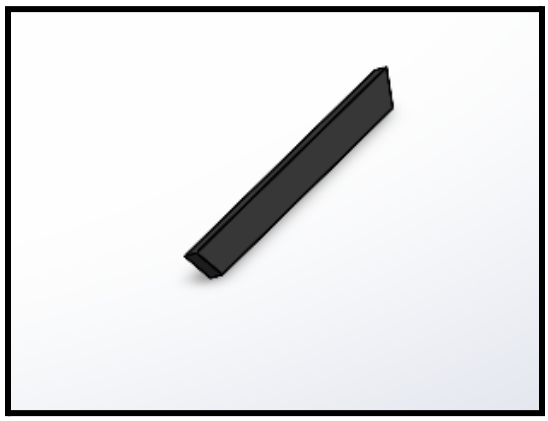

Apex Seals
Material: Graphite/Steel Ceramic-Metallic Blend
Function: Apex seals seal compressed and combusting gasses from each other against the rotor housing while keeping a low-friction contact between them.

Apex Seal Springs
Material: Steel
Function: At high engine speeds, centripetal force pushes the apex seals outwards into the housing, creating the seal. At low engine speeds, the apex seals need help from the side seals pushing them out of the rotor to create sealing. This is necessary because the corners of the triangular geometry of the rotor do not perfectly line up to the shape of the housing, so sealing requires that the apex seal moves in and out of the rotor to compensate for the distance disparity.

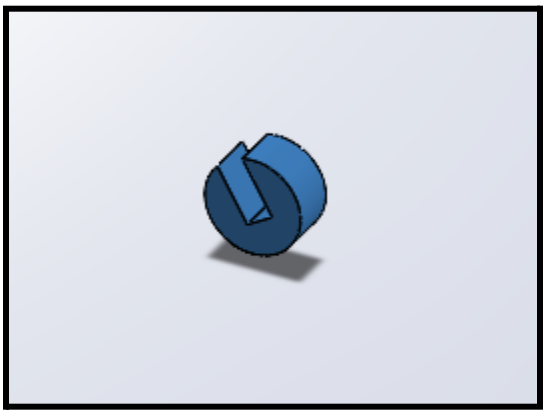

Apex Seal Washer
Material: Steel
Function: This component is also called the corner seal. It holds the apex and outer side seals at ideal angles for sealing.

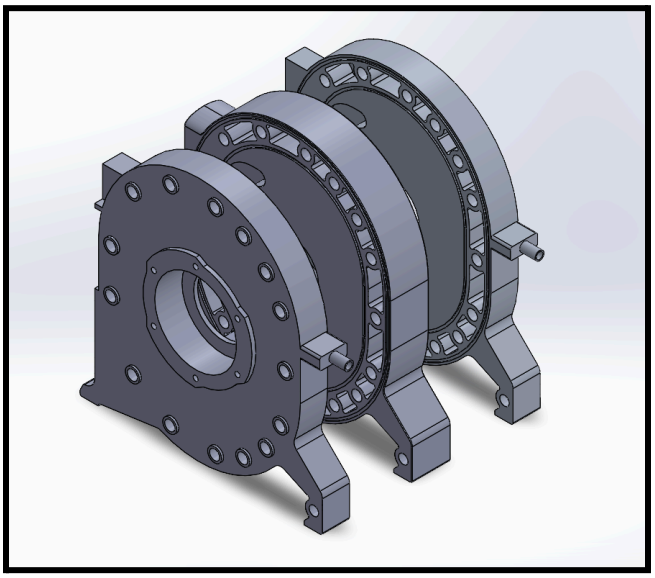

Irons (front, middle, and rear irons)
Material: Cast Iron and Chromium
Function: The irons seal the sides of the combustion chambers and rotors. While the entire component is made of cast iron, the surface against the rotor is made of smooth hard chromium to reduce friction and increase sealing efficiency. Channels for coolant, engine air intake, hardware adaptations, and crankshaft bearings are incorporated into these designs.

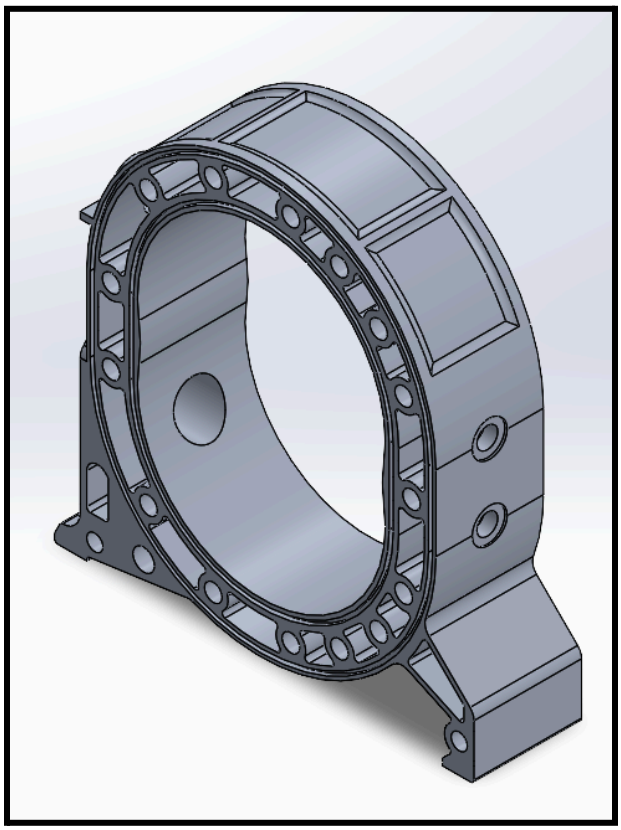

Rotor Housings
Material: Cast Aluminum, Chromium, and Inconel
Function: The two housings encase the rotors along with the irons. Their aluminum construction allows for thermal expansion, and the chromium surface provides excellent sealing and friction properties against the apex seals. Spark plug and exhaust bores are incorporated into the design.

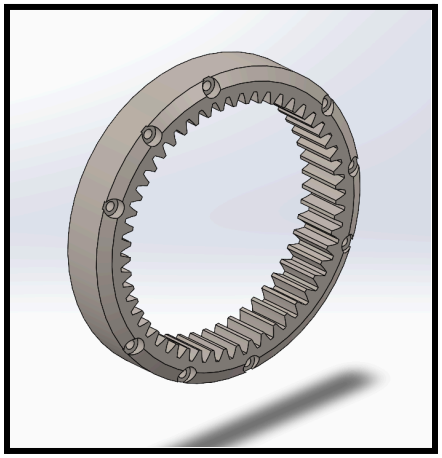

Rotor Internal Spur Gear
Material: Cast Iron
Function: The internal spur gear is fixed to the rotor. It meshes with the stationary gear and prevents the rotor from freely spinning. This synchronizes the rotor's movement with the eccentric shaft which allows proper combustion timing to occur.

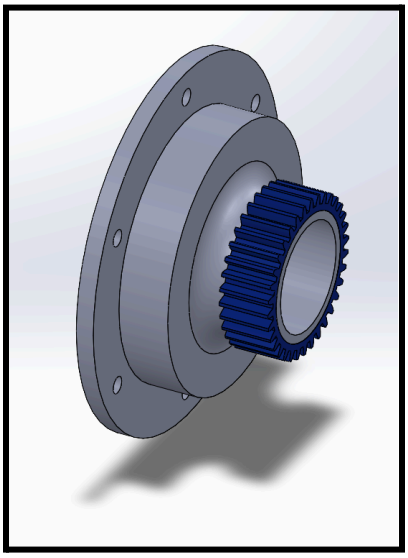

Stationary Gear
Material: Cast Iron
Function: This stationary gear is bolted to the iron and guides the motion of the rotor using a 3:2 gear ratio in a spur gear system.

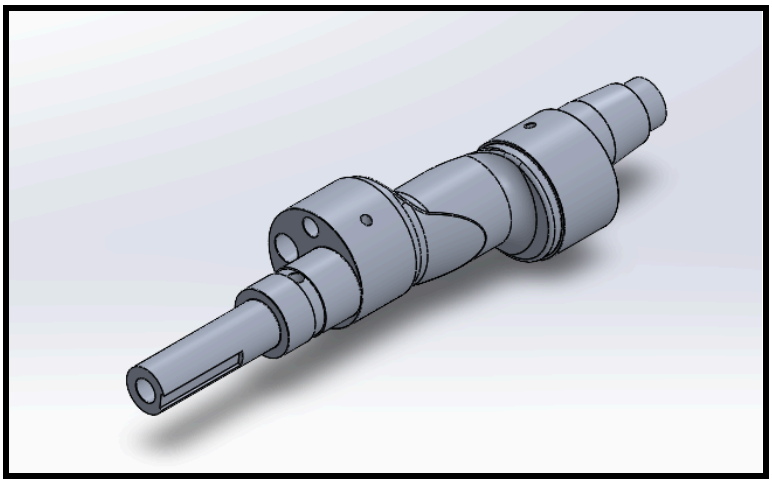

Eccentric Shaft
Material: 4340 Billet Steel
Function: The eccentric shaft is the crankshaft of the wankel engine, converting the spinning motion of the rotors into harnessable torque. The E-shaft has internal oil passages to lubricate the bearings between itself and the rotor and engine irons.

Tolerances & Drawings

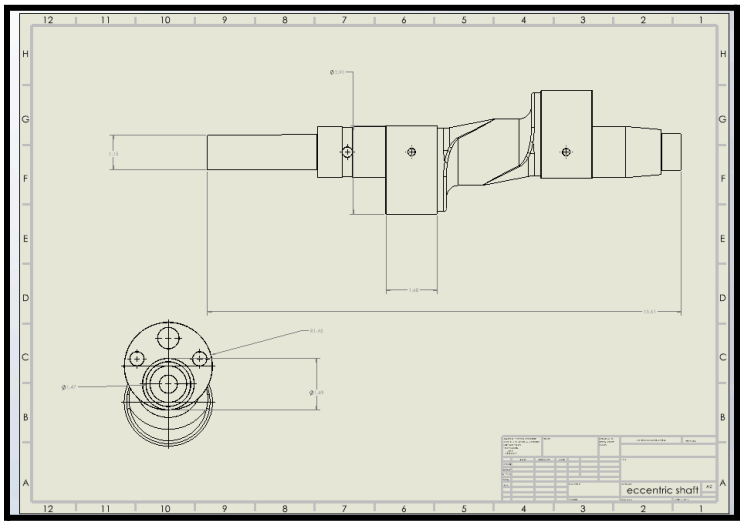

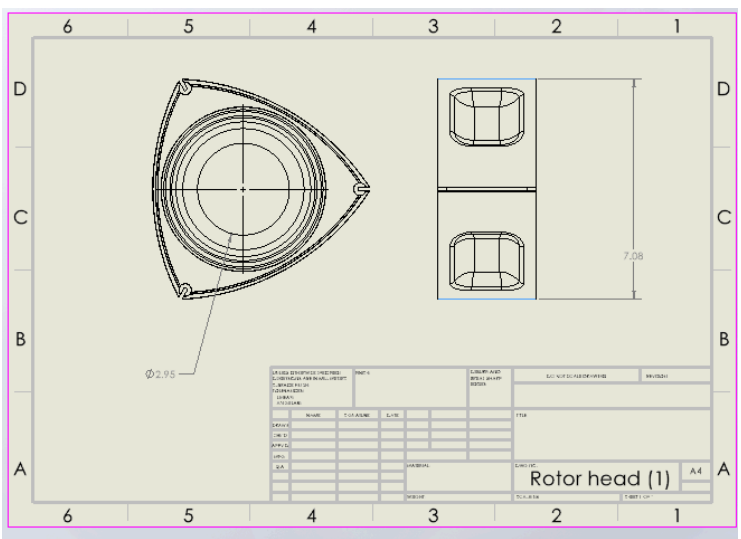

In a wankel engine, the crankshaft and rotor have a journal bearing system to keep it lubricated at potential speeds of 10,000rpm. In our model, the eccentric shaft lobe diameter is 2.95in. Since our model is simplified, the bearing inner diameter on the rotor also has a diameter of 2.95in. Obviously, in real life, these two diameters cannot be the same; there has to be a gap between the two diameters for oil to get in there and lubricate. For a targeted oil clearance of 0.001in, appropriate tolerances for the E-shaft would be 2.9495-2.95in and 2.9505-2.9510in for the rotor bearing.

For the crankshaft bearings against the irons, the crankshaft journal diameter is at 1.6895-1.6900in and 1.6905-1.6910in for the bore in the engine iron.

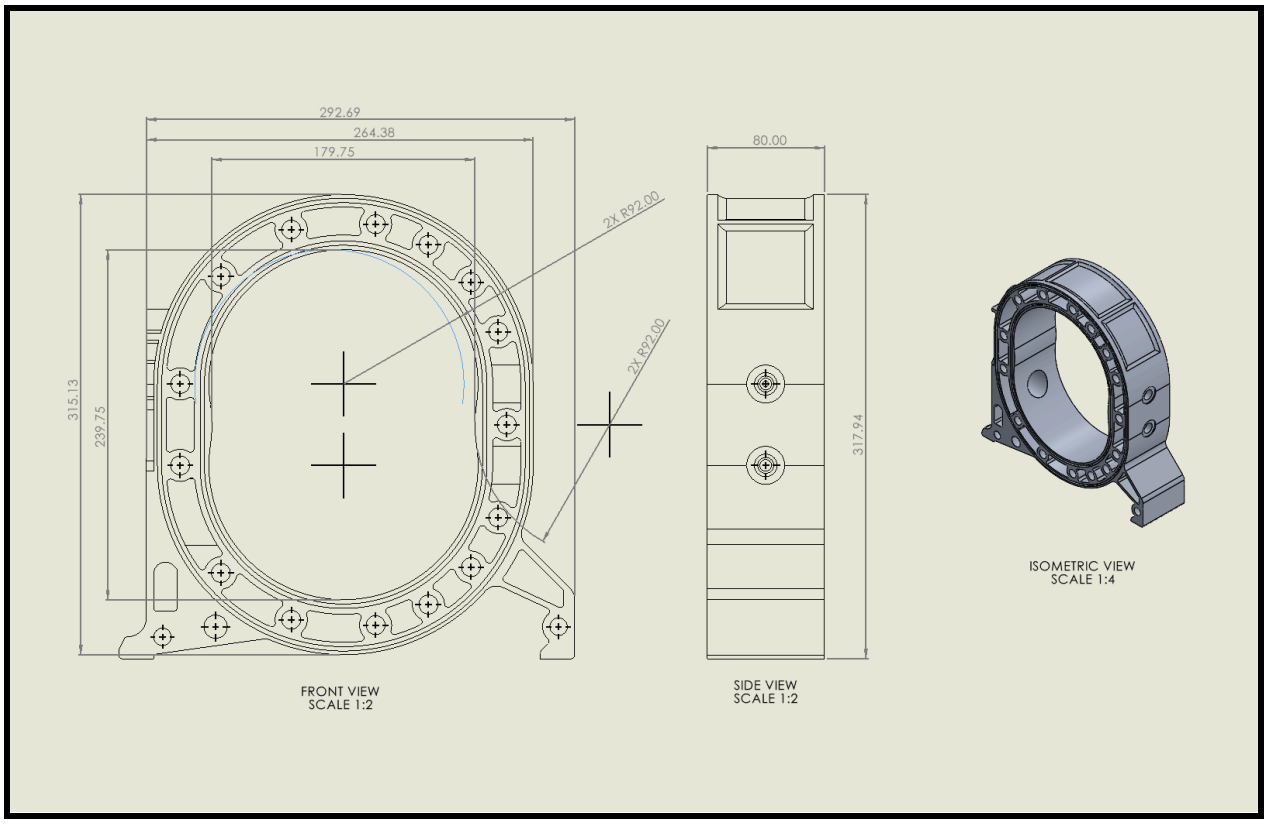
292.69
264.38
179.75
315.13
239.75
2X R92.00
2X R92.00
FRONT VIEW
SCALE 1:2
80.00
317.94
SIDE VIEW
SCALE 1:2
ISOMETRIC VIEW
SCALE 1:4

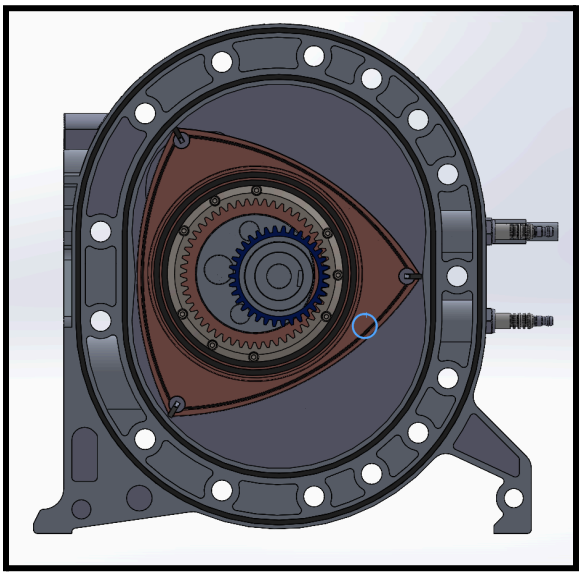

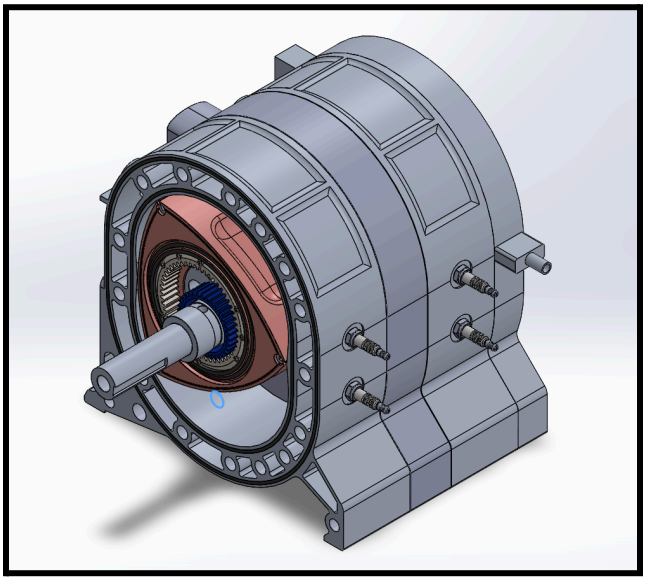

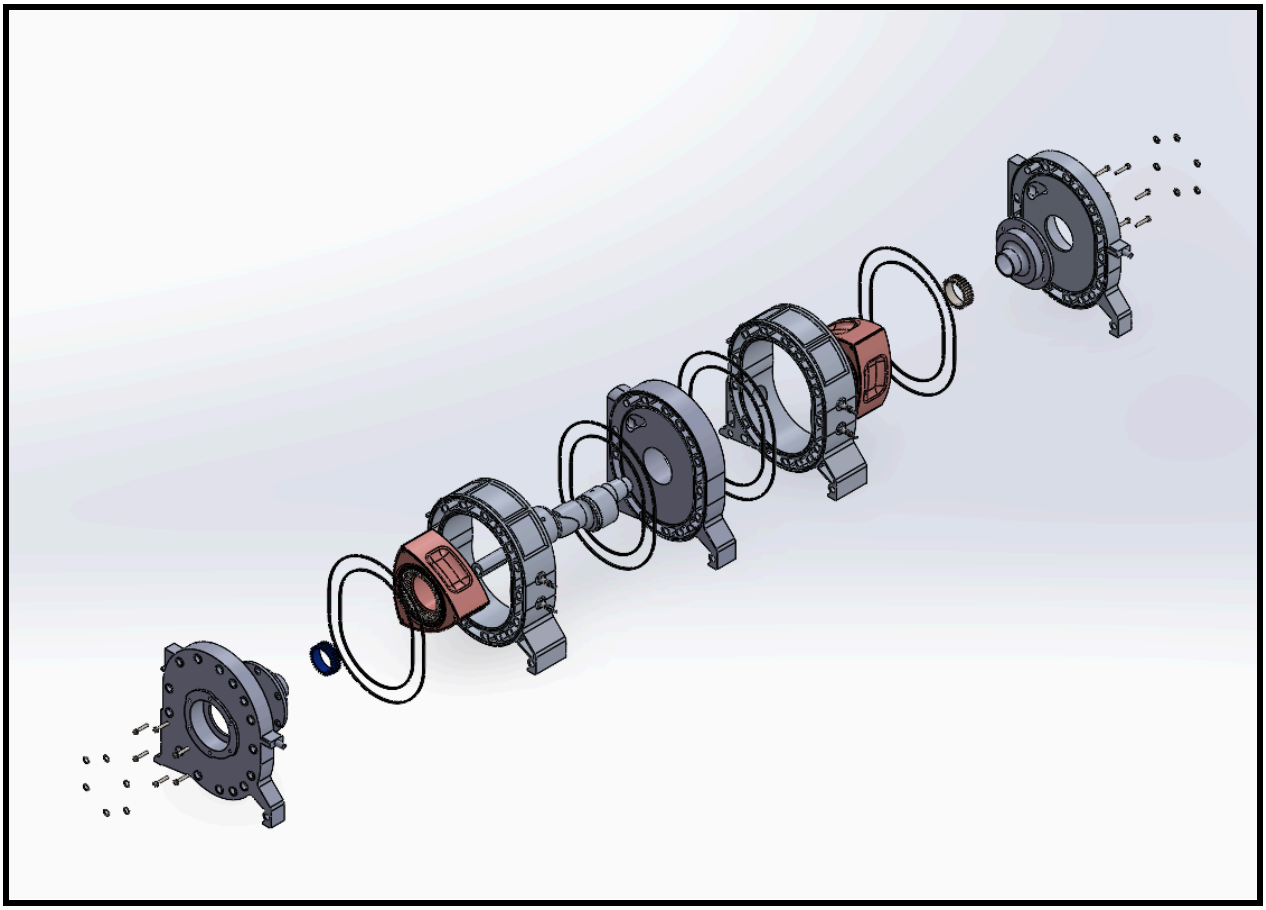

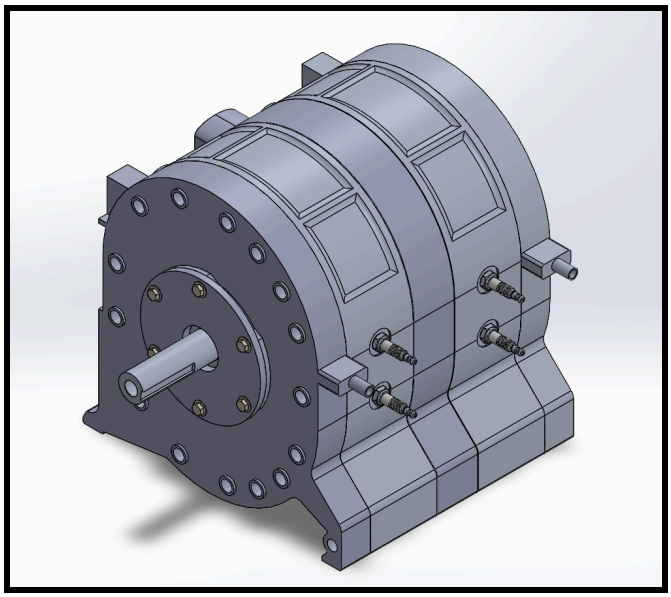

Analysis & Major Design Changes

Main Rotor Analysis

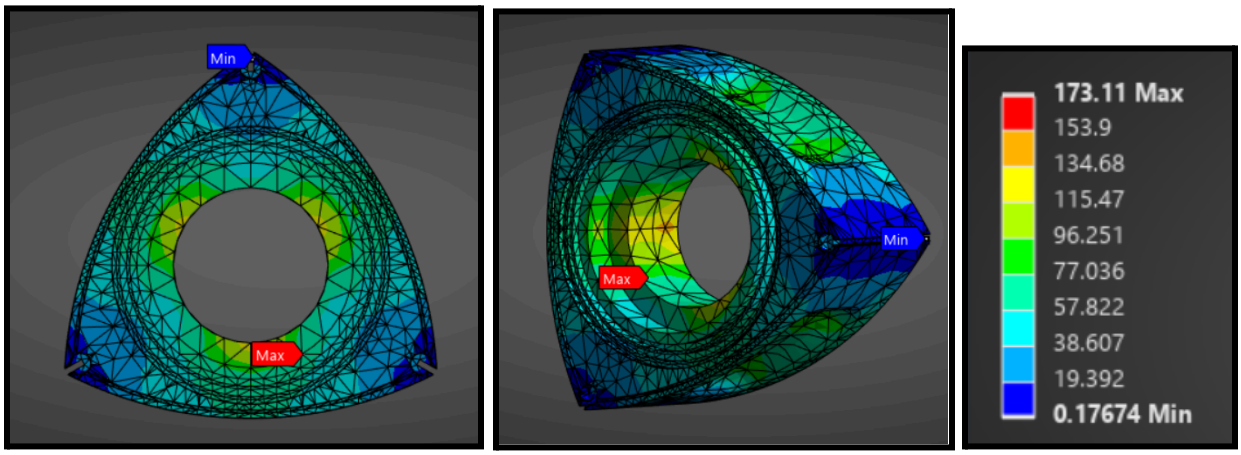

Above is a FEA analysis of our cast iron rotor under centrifugal load. This is the rotor under a simulated maximum loading of 10,000 RPM creating a maximum loading of 173.11 MPa in the rotor.

At first, cast iron was used as the material, but realistically the rotor had a higher Poisson's ratio and Young's modulus than the data in ANSYS. Before editing these properties, part of the rotor face would be crushed under the pressure from combustion. After editing the properties, all of the solution numbers looked much more realistic.

Eccentric Shaft Analysis

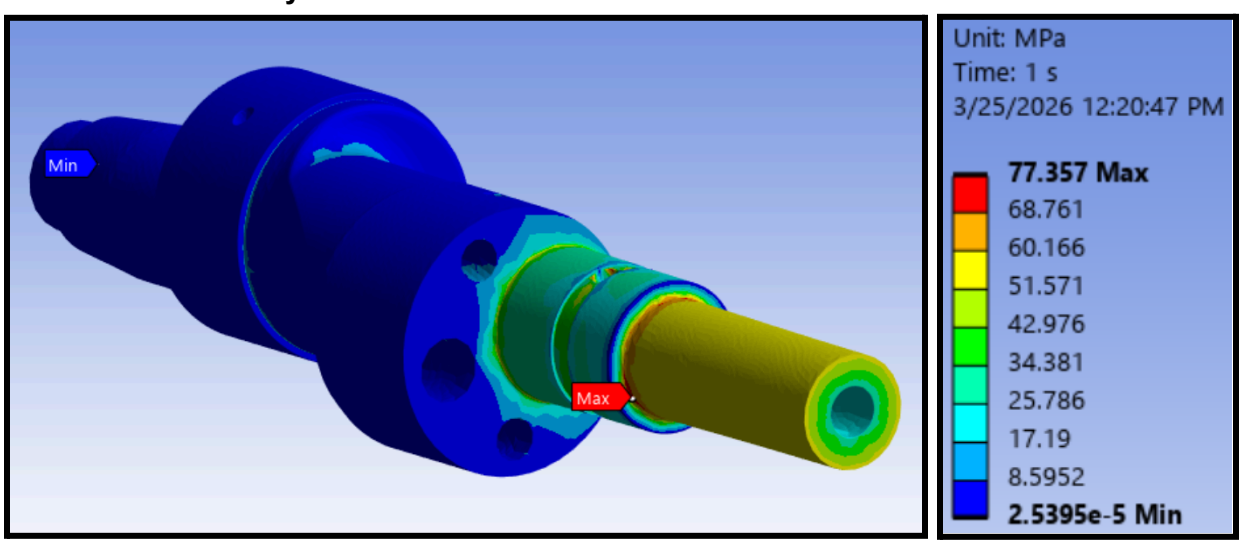

Equivalent Stress of Eccentric Shaft

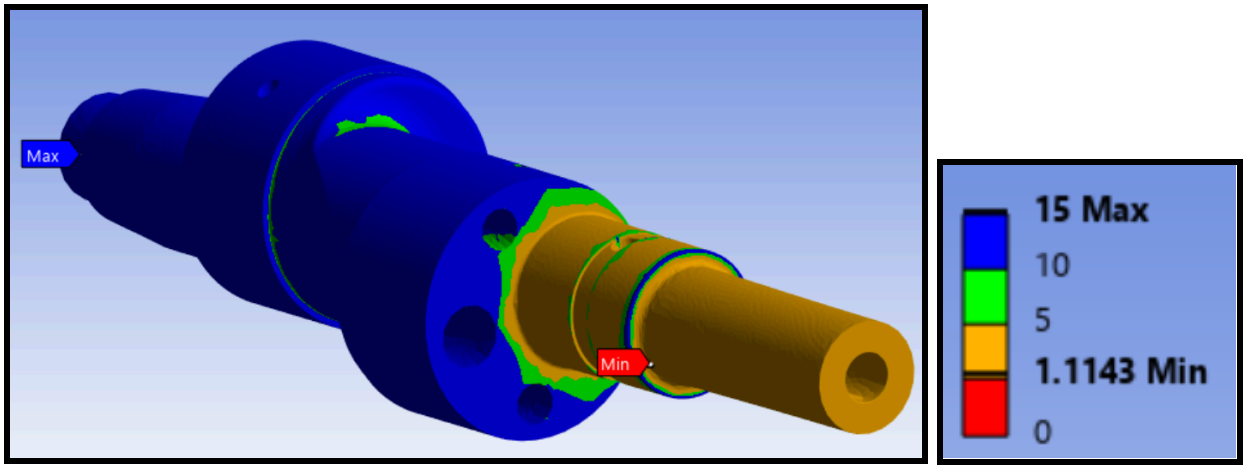

Fatigue safety factor for Infinite Life

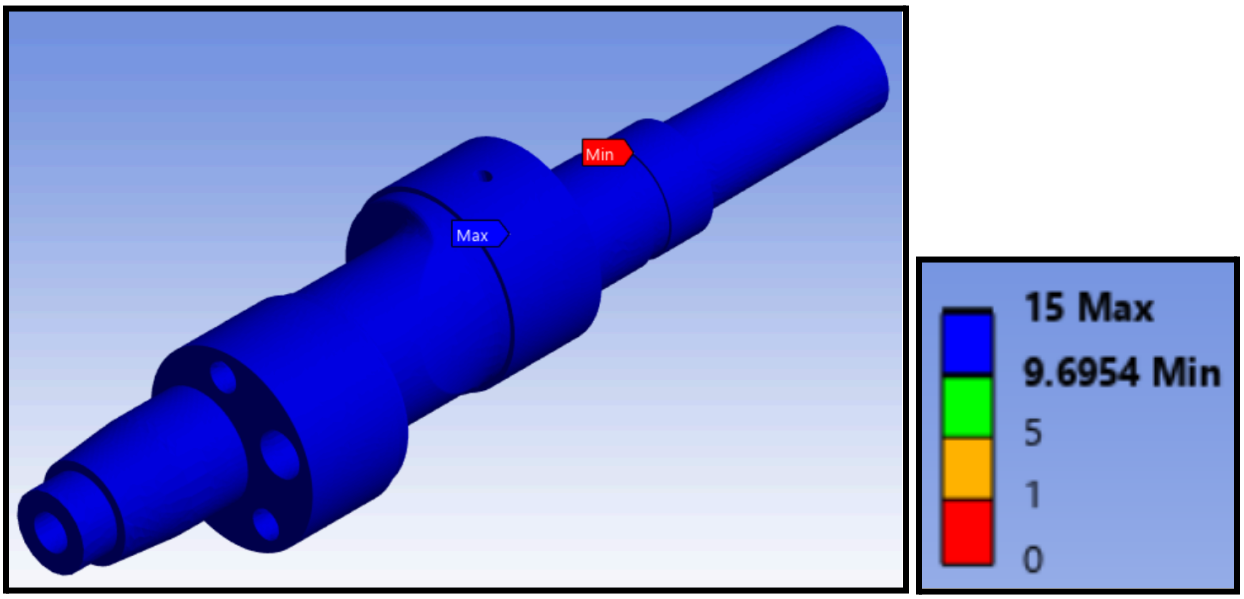

Stress Safety Factor

Just like the rotor analysis, changing material properties was our first major edit. After switching from structural steel to AISI 4340 Billet Steel, which is the material Mazda uses in 13B eccentric shafts, the stress factor of safety jumped from barely over 1 to a more appropriate 1.7. However, that is still too low, and there were heavy stress concentrations between the eccentric lobes and the rest of the shaft. After increasing the fillet radius on the geometry, the factor of safety increased to an appropriate 4.17. Upon running the fatigue analysis, however, we noticed that the fatigue safety factor was very low, at around 0.2. This is due to the insufficient fillet and output shaft radii. Using this data, we were able to make some design changes. The keyway on the output shaft was also removed as this keyway will be supported by its respective mate in a real world scenario, so it was removed to simplify the analysis. Increasing the fillet radii to 1.5mm and the output shaft radii to 34mm, resulted in a much higher fatigue factor of safety of 1.1143. This may seem lower than is desirable for a part like this, but remember that this is the *fatigue* factor of safety, and the stress factor of safety. Routine inspections and maintenance will

reveal true wear of this part so it can be replaced before catastrophic failure, and indicate that fatigue is the governing failure mode for this part.

Internal Gear Analysis

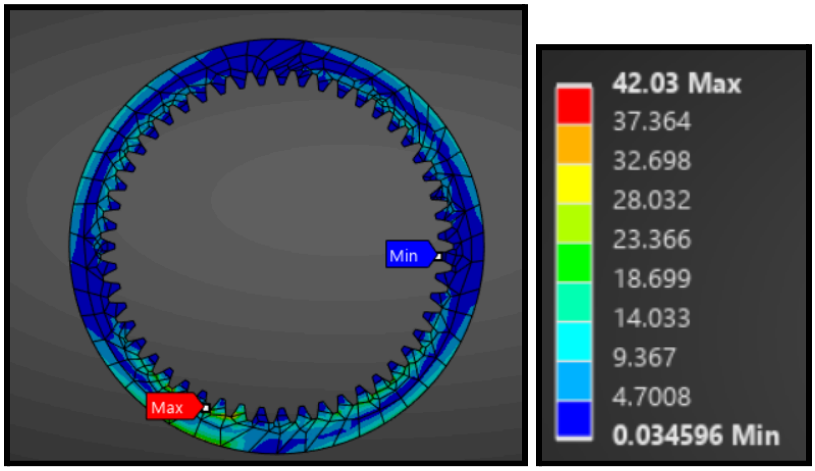

Above is another FEA analysis of the internal gear that is inside the rotor head. This is under near max conditions again with the engine at 10,000 rpms so we put a force of 1,000 newtons on one tooth face. The gear as a whole experienced a maximum of 42.03 MPas in equivalent stress. The gear also has a running safety factor of about 6 which is very respectable.

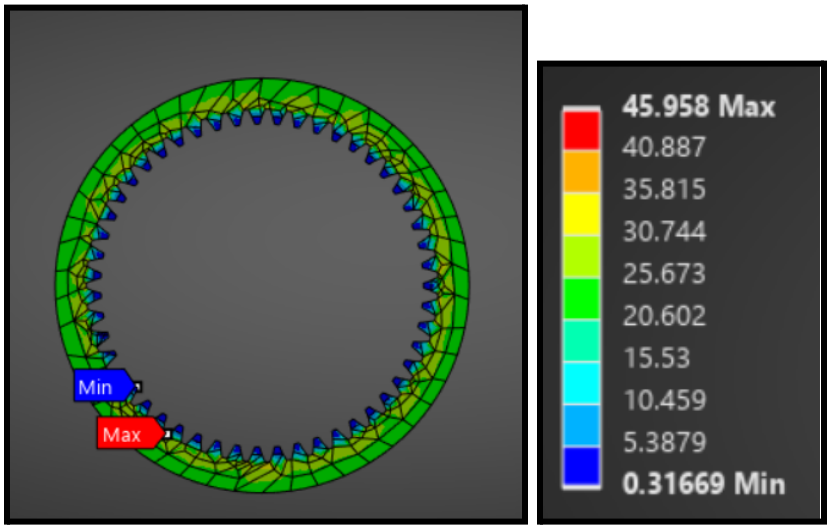

Above is the same gear but under centrifugal forces where the gear is spinning at about 10,000 rpm. The gear is experiencing a maximum of 45.958 MPa of equivalent stress which is an acceptable loading as our factor of safety ramin at around 6.

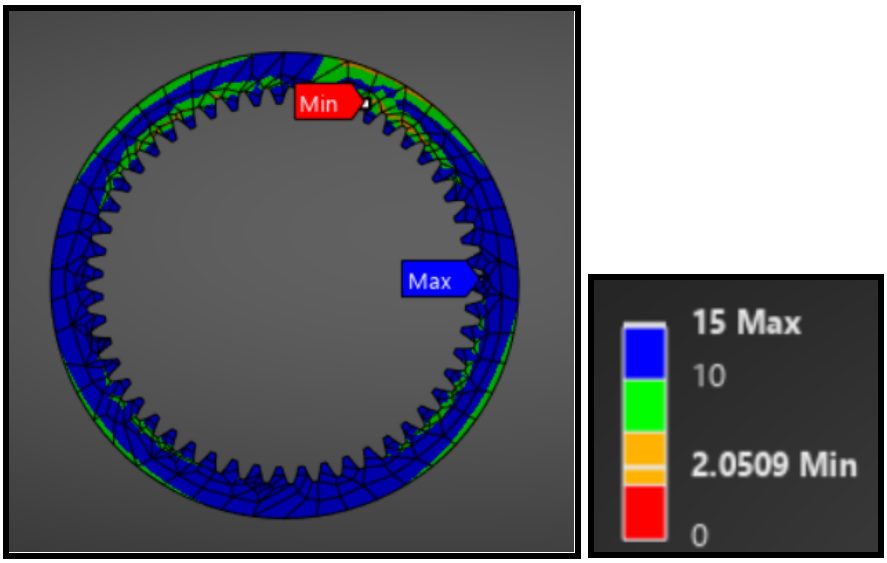

Above is a fatigue analysis of the gear which results in a factor of safety of 2.0509 which is very good for a part like this where one tooth is experiencing a force of over 1000 Newton which is similar to what a single tooth would experience when the rotor is spinning at 10,000 rpm and meshing with the other spur gear.

Bearing Analysis

This rotary engine uses journal bearings, similar to most other internal combustion engines. These work by providing two smooth surfaces where oil can be applied to reduce friction, drag and wear. It is very important that these two surfaces are always separated by a thin film of oil. This film of oil can be described through the Sommerfeld number. This is a dimensionless number that explains how thick the lubricant film between two moving parts is. Low Sommerfeld numbers indicate lubricant film breakdown and can lead to higher wear, temperatures, and lower part life. High Sommerfeld numbers indicate very thick lubricant film with possible efficiency loss. A plot of the Sommerfeld number vs. engine RPM can be seen here:

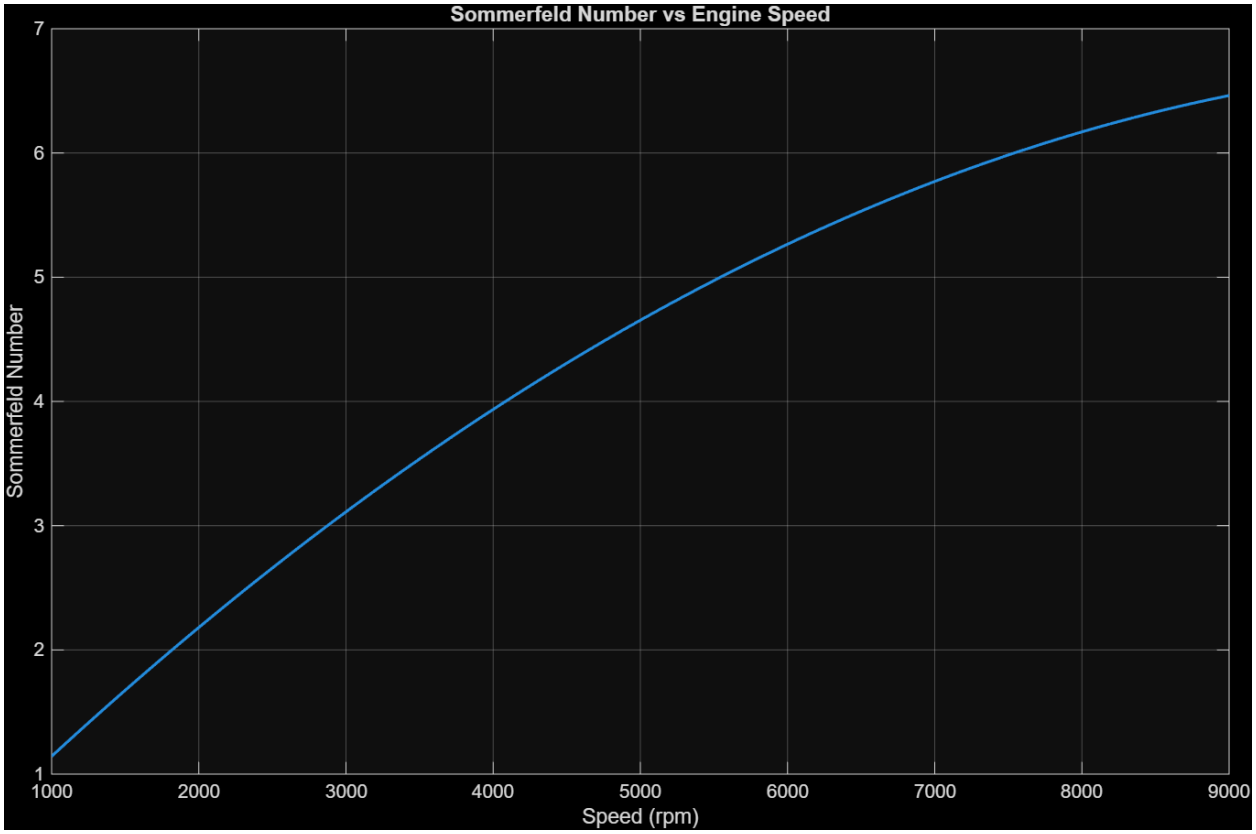

Notice how the rate of increase of the Sommerfeld number drops off near max RPM. This is due to the decreased viscosity of the oil at higher temperatures. At standard operating speeds (2-3k RPM) the Sommerfeld number is around 2.5, which is perfect for these types of bearings. At higher RPM, the sommerfeld number is closer to 7, which is rather high, but it ensures the longevity of the bearings and the small efficiency loss is simply a tradeoff of this. Overall, the bearings will hold up to long term use inside this engine.

Model Assembly for 3D printing

The design uses bolt patterns and aligned holes to keep the rotor housing together. The journal bearings keep the e-shaft aligned with the centerpoint while allowing rotation through the combustion process. The design of the main components allow for 3D printing because of the orientation of the components on the build plate. This model should be able to be scaled down a couple times to be 3D printed on a standard sized printer. Luckily, with this model there are not too many overhangs, and the amount of support trees needed are not too much making the 3D printing process relatively simple. Critical components used in the 3D printed prototype assembly include the rotor, eccentric shaft, rotor housings, and engine irons. Including smaller seals are not necessary for this prototype due to added restriction, but this is acceptable because a plastic model was never meant to achieve vacuum, compression, or combustion that requires precise sealing.

Risks and Weaknesses

3D printing is not an ideal form of prototyping for an engine model because of the imprecision. Since plastic expands anywhere from 0.1% - 1%, precise dimensions and tolerances are very difficult to achieve with 3D printed parts. The precision needed for proper combustion sealing is in the thousandths of an inch for a full sized engine, so even with accurate expansion calculations and high quality printing, a 3D printed engine cannot generate necessary vacuum and compression. However, for our prototype, we never aimed to achieve combustion; instead we are opting for the correct mechanics. 3D printing absolutely has the precision for our engine to cycle accurately as long as we are careful with printing tolerances. By decreasing outer diameters in bearing surfaces, eliminating seal components, and smoothing out rough printed surfaces through sanding, a printed model can achieve correct dynamics. To improve the prototype, decreasing gear teeth numbers and increasing teeth depth in appropriate ratios will smooth out the rotation of the rotor in the housing. Another weakness of the 3D printed model is heat tolerance. Real engines operate at over 200 degrees; at that temperature the 3D printed plastic is heavily deforming. Because of this, our engine cannot be spun at comparable speeds to machined and cast metal prototypes.